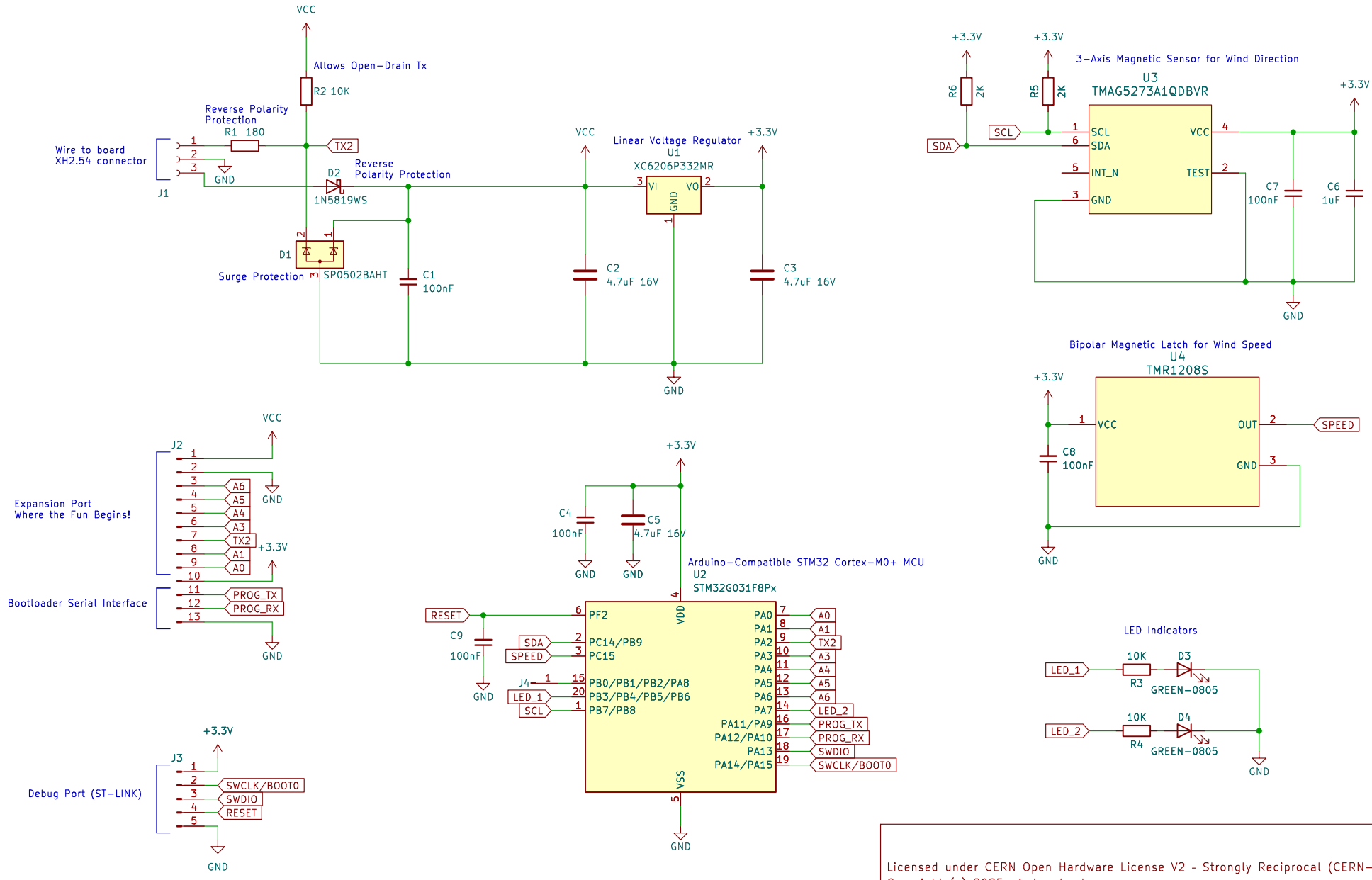

Licensed under CERN Open Hardware License V2 - Strongly Reciprocal (CERN-OHL-S)
Copyright (c) 2025 windnerd.net

Sheet: /
File: core-v1.kicad_sch

Title: WindNerd Core – Sensor board for 3D printed anemometer

Size: A4	Date: 2025-10-01	Rev: 1
KiCad E.D.A. kicad 7.0.11+dfsg-1build4		Id: 1/1