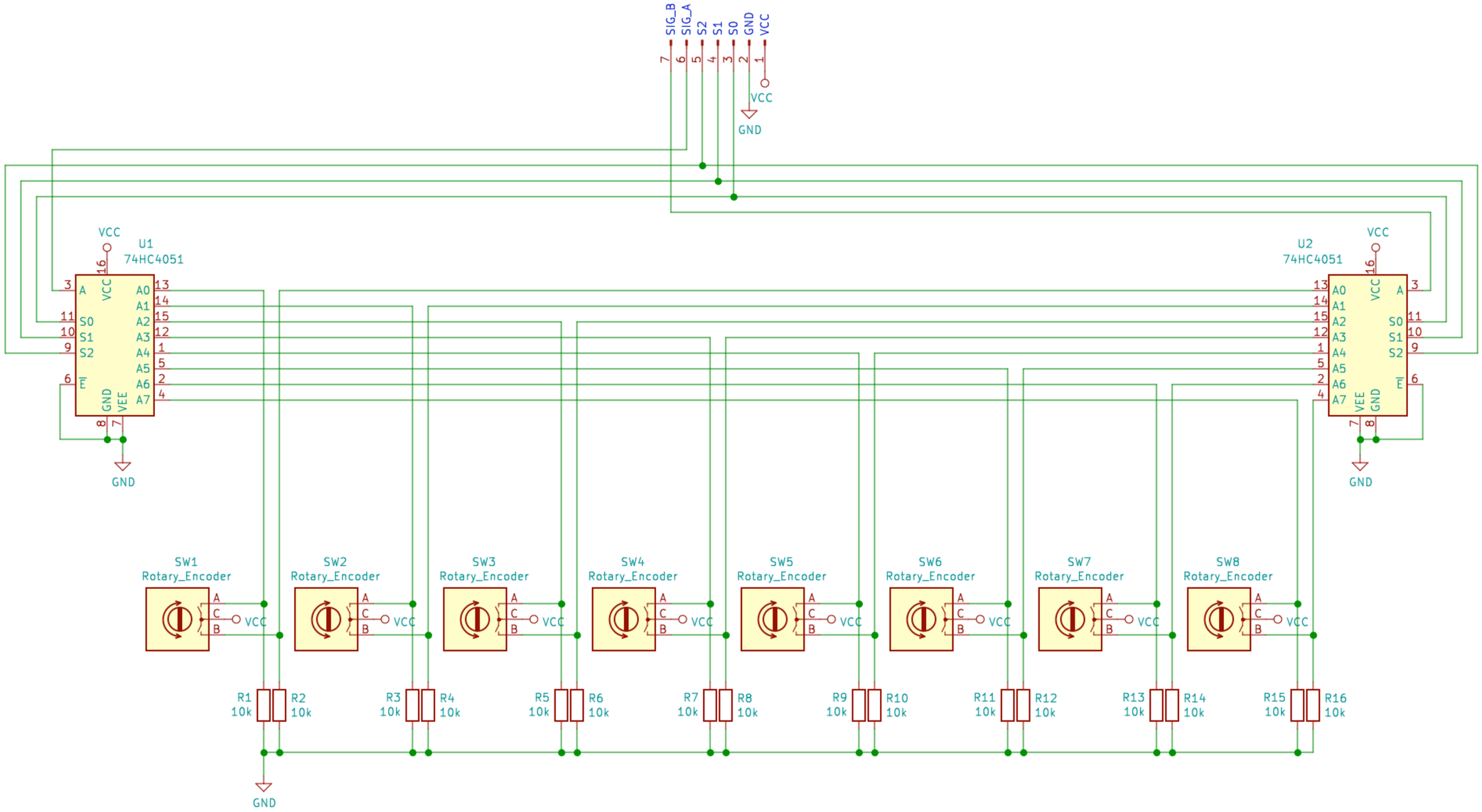

Multiplexer for up to 8 encoders using 74HC4051.

VCC is 3.3V supplied by the Teensy.
S0, S1, S2 are used to select the encoder to read.
SIG_A and SIG_B are the encoder return signals, and require
a pulldown resistor at the Teensy input (either internal or external).

Sheet: /
File: EncoderTool.sch

Title: 74HC4051 Multiplexed Encoders

Size: A4	Date: 2022-02-10	**Rev:** 1
KiCad E.D.A. kicad (5.1.5-0-10_14)		Id: 1/1