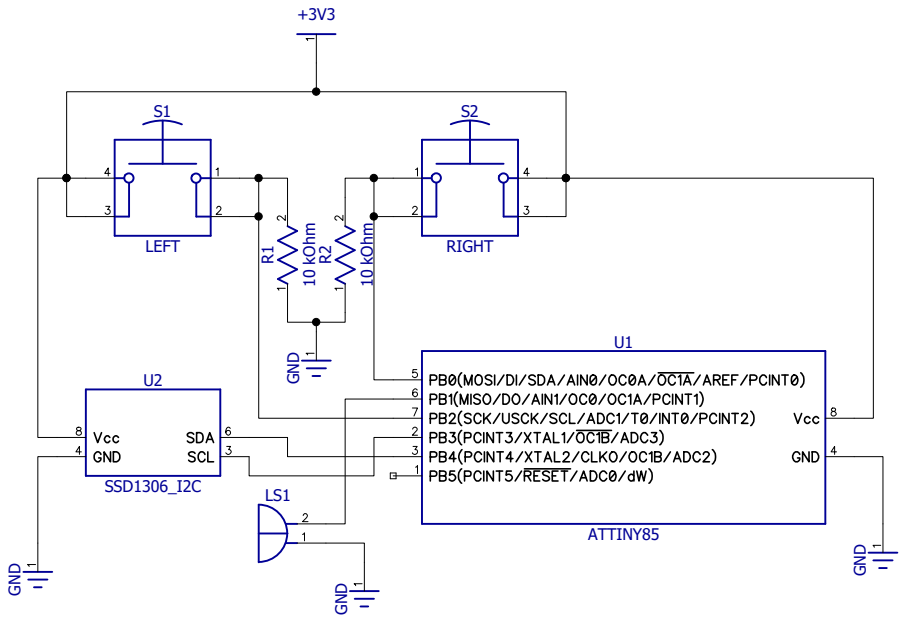
+3V3
S1
LEFT
S2
RIGHT
R1
10 kOhm
R2
10 kOhm
GND
U1
PB0(MOSI/DI/SDA/AIN0/OC0A/OC1A/AREF/PCINT0)
PB1(MISO/DO/AIN1/OC0/OC1A/PCINT1)
PB2(SCK/USCK/SCL/ADC1/T0/INT0/PCINT2)
PB3(PCINT3/XTAL1/OC1B/ADC3)
PB4(PCINT4/XTAL2/CLKO/OC1B/ADC2)
PB5(PCINT5/RESET/ADC0/dW)
Vcc
GND
ATTINY85
U2
Vcc
GND
SDA
SCL
SSD1306_I2C
LS1