OSP32.PrjPcb

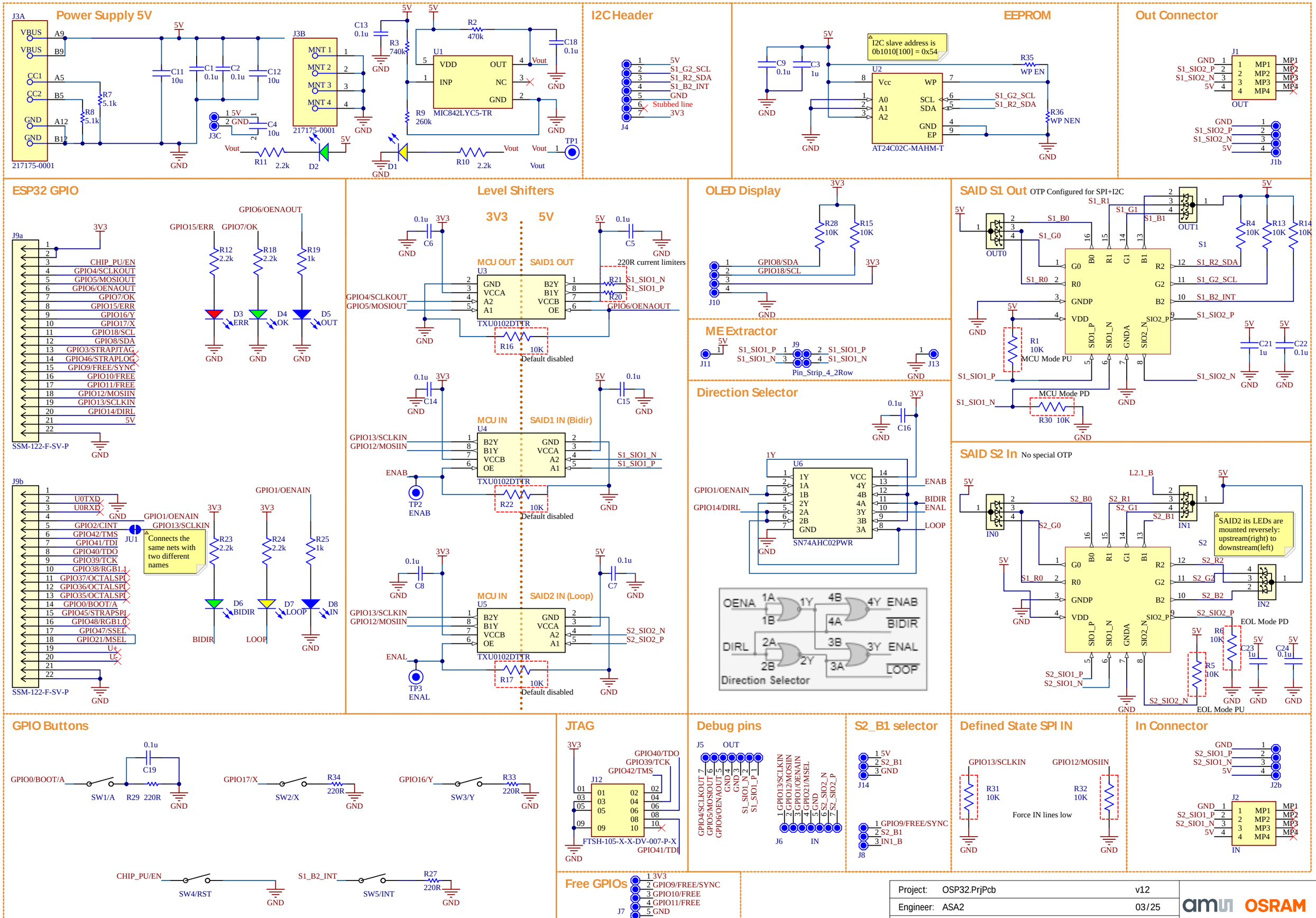
Power Supply 5V
J3A
VBUS A9
VBUS B9
CC1 A5
CC2 B5
GND A12
GND B12
217175-0001
R7 5.1k
R8 5.1k
C11 10u
C1 0.1u
C2 0.1u
C12 10u
J3B
MNT 1
MNT 2
MNT 3
MNT 4
217175-0001
J3C
5V
GND
C4 10u
Vout
R11 2.2k
D2
D1
R10 2.2k
TP1
C13 0.1u
R3 740k
R2 470k
U1
VDD
OUT
INP
NC
GND
MIC842LYC5-TR
C18 0.1u
R9 260k
I2C Header
J4
5V
S1_G2_SCL
S1_R2_SDA
S1_B2_INT
GND
Stubbed line
3V3
EEPROM
I2C slave address is 0b1010[100] = 0x54
C9 0.1u
C3 1u
U2
Vcc
WP
A0
A1
A2
SCL
SDA
GND
EP
AT24C02C-MAHM-T
R35 WP EN
R36 WP NEN
Out Connector
J1
GND
S1_SIO2_P
S1_SIO2_N
5V
MP1
MP2
MP3
MP4
OUT
J1b
ESP32 GPIO
J9a
3V3
CHIP_PU/EN
GPIO4/SCLKOUT
GPIO5/MOSIOUT
GPIO6/OENAOUT
GPIO7/OK
GPIO15/ERR
GPIO16/Y
GPIO17/X
GPIO18/SCL
GPIO8/SDA
GPIO3/STRAPJTAG
GPIO46/STRAPLOG
GPIO9/FREE/SYNC
GPIO10/FREE
GPIO11/FREE
GPIO12/MOSIIN
GPIO13/SCLKIN
GPIO14/DIRL
5V
SSM-122-F-SV-P
R12 2.2k
R18 2.2k
R19 1k
D3 ERR
D4 OK
D5 OUT
J9b
U0TXD
U0RXD
GPIO2/CINT
GPIO42/TMS
GPIO41/TDI
GPIO40/TDO
GPIO39/TCK
GPIO38/RGB1.1
GPIO37/OCTALSPI
GPIO36/OCTALSPI
GPIO35/OCTALSPI
GPIO0/BOOT/A
GPIO45/STRAPSPI
GPIO48/RGB1.0
GPIO47/SSEL
GPIO21/MSEL
U+
U-
JU1
Connects the same nets with two different names
GPIO1/OENAIN
R23 2.2k
R24 2.2k
R25 1k
D6 BIDIR
D7 LOOP
D8 IN
Level Shifters
3V3
5V
MCU OUT
SAID1 OUT
U3
GND
VCCA
A2
A1
B2Y
B1Y
VCCB
OE
TXU0102DTTR
C6 0.1u
C5 0.1u
220R current limiters
R21 S1_SIO1_N
R20 S1_SIO1_P
GPIO4/SCLKOUT
GPIO5/MOSIOUT
GPIO6/OENAOUT
R16 10K
Default disabled
MCU IN
SAID1 IN (Bidir)
U4
C14 0.1u
C15 0.1u
GPIO13/SCLKIN
GPIO12/MOSIIN
ENAB
TP2 ENAB
R22 10K
Default disabled
MCU IN
SAID2 IN (Loop)
U5
C8 0.1u
C7 0.1u
S2_SIO2_N
S2_SIO2_P
ENAL
TP3 ENAL
R17 10K
Default disabled
OLED Display
R28 10K
R15 10K
GPIO8/SDA
GPIO18/SCL
J10
ME Extractor
J11
J9
S1_SIO1_P
S1_SIO1_N
Pin_Strip_4_2Row
J13
Direction Selector
C16 0.1u
U6
1Y
1A
1B
2Y
2A
2B
VCC
4Y
4B
4A
3Y
3B
3A
SN74AHC02PWR
ENAB
BIDIR
ENAL
LOOP
OENA
DIRL
Direction Selector
SAID S1 Out
OTP Configured for SPI+I2C
OUT0
OUT1
S1
S1_R1
S1_G1
S1_B1
S1_B0
S1_G0
S1_R0
G0
R0
GNDP
VDD
B0
R1
G1
B1
R2
G2
B2
SIO2_P
SIO1_P
SIO1_N
GNDA
SIO2_N
S1_R2_SDA
S1_G2_SCL
S1_B2_INT
S1_SIO2_P
S1_SIO2_N
R4 10K
R13 10K
R14 10K
R1 10K
MCU Mode PU
MCU Mode PD
R30 10K
C21 1u
C22 0.1u
SAID S2 In
No special OTP
IN0
IN1
IN2
L2.1_B
S2
S2_B0
S2_R1
S2_G1
S2_B1
S2_G0
S2_R0
S2_R2
S2_G2
S2_B2
S2_SIO2_P
S2_SIO1_P
S2_SIO1_N
S2_SIO2_N
SAID2 its LEDs are mounted reversely: upstream(right) to downstream(left)
EOL Mode PD
EOL Mode PU
R6 10K
R5 10K
C23 1u
C24 0.1u
GPIO Buttons
0.1u
C19
GPIO0/BOOT/A
SW1/A
R29 220R
GPIO17/X
SW2/X
R34 220R
GPIO16/Y
SW3/Y
R33 220R
CHIP_PU/EN
SW4/RST
S1_B2_INT
SW5/INT
R27 220R
JTAG
3V3
GPIO40/TDO
GPIO39/TCK
GPIO42/TMS
J12
FTSH-105-X-X-DV-007-P-X
GPIO41/TDI
Debug pins
J5
OUT
GPIO4/SCLKOUT 7
GPIO5/MOSIOUT 6
GPIO6/OENAOUT 5
GND 4
GND 3
S1_SIO1_N 2
S1_SIO1_P 1
1 GPIO13/SCLKIN
2 GPIO12/MOSIN
3 GPIO1/OENAIN
4 GPIO21/MSEL
5 GND
6 S2_SIO2_N
7 S2_SIO2_P
J6
IN
S2_B1 selector
1 5V
2 S2_B1
3 GND
J14
1 GPIO9/FREE/SYNC
2 S2_B1
3 IN1_B
J8
Defined State SPI IN
GPIO13/SCLKIN
GPIO12/MOSIIN
R31 10K
R32 10K
Force IN lines low
In Connector
J2b
J2
IN
Free GPIOs
J7
1 3V3
2 GPIO9/FREE/SYNC
3 GPIO10/FREE
4 GPIO11/FREE
5 GND
Project: OSP32.PrjPcb v12
Engineer: ASA2 03/25
Page size: A3 Sheet: 2 of 2
OSRAM

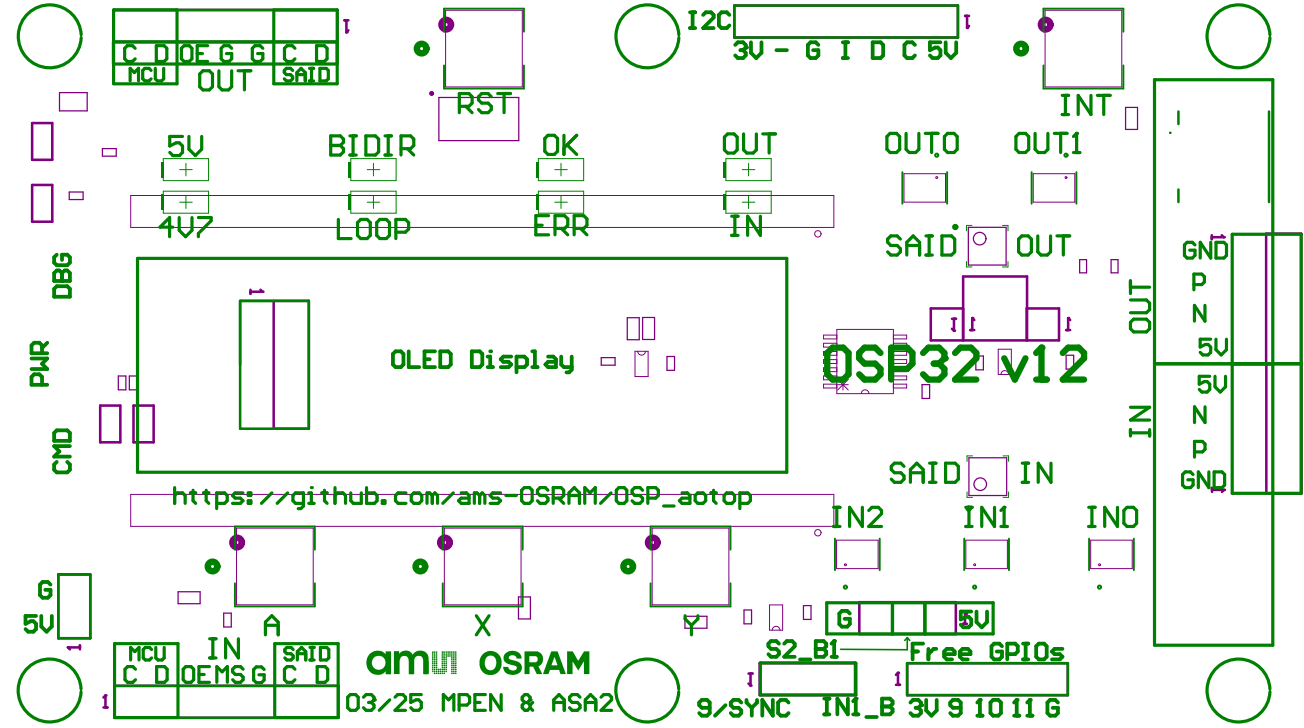
C D OE G G C D
MCU
OUT
SAID
RST
I2C
3V - G I D C 5V
INT
5V
BIDIR
OK
OUT
4V7
LOOP
ERR
IN
OUT0
OUT1
SAID
OUT
DBG
PWR
CMD
OLED Display
OSP32 v12
GND
P
N
5V
OUT
5V
N
P
GND
IN
SAID
IN
https://github.com/ams-OSRAM/OSP_aotop
IN2
IN1
IN0
G
5V
A
X
Y
G
5V
S2_B1
Free GPIOs
MCU
C D
IN
OE MS G
SAID
C D
ams OSRAM
03/25 MPEN & ASA2
9/SYNC
IN1_B
3V 9 10 11 G

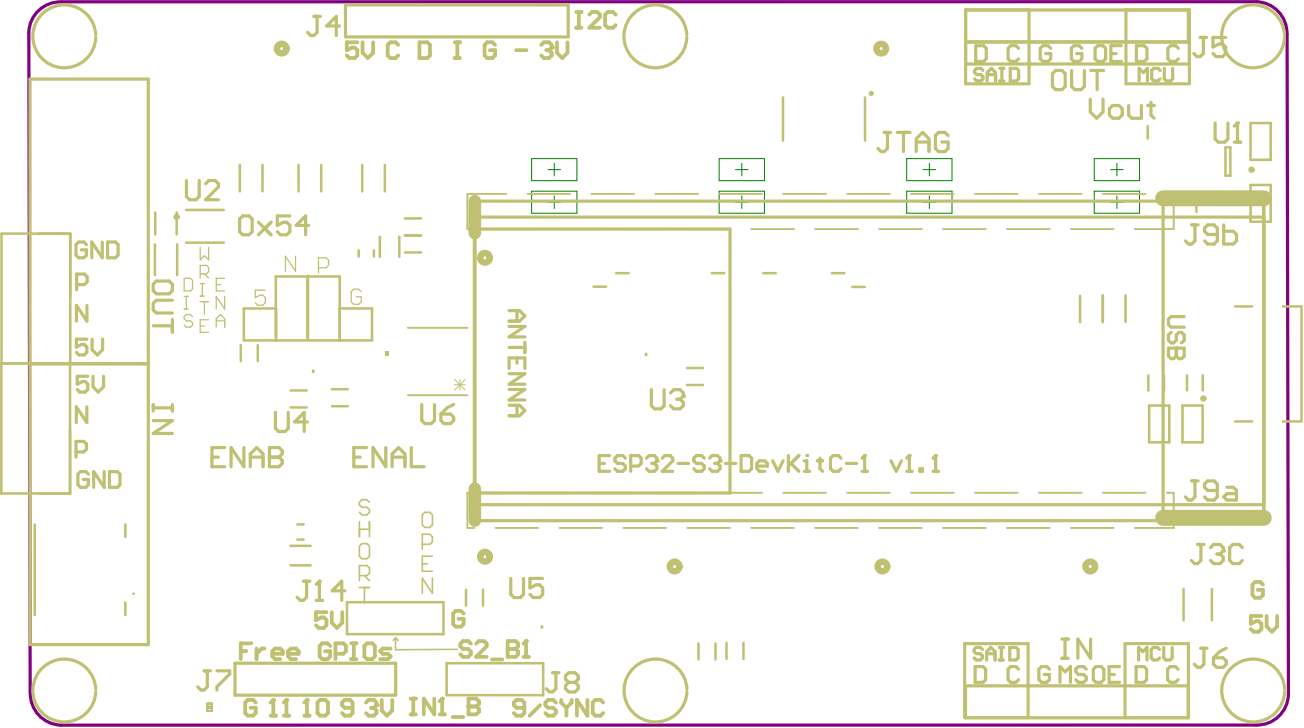
J4
I2C
5V C D I G - 3V
D C G G OE D C
SAID
OUT
MCU
J5
Vout
JTAG
U1
U2
0x54
J9b
GND
P
N
5V
5V
N
P
GND
OUT
IN
DISE
WRITEA
N P
5 G
ANTENNA
U3
USB
U4
U6
ENAB
ENAL
ESP32-S3-DevKitC-1 v1.1
J9a
SHORT
OPEN
J14
5V
G
U5
J3C
G
5V
Free GPIOs
S2_B1
J7
G 11 10 9 3V
IN1_B
J8
9/SYNC
SAID
D C
IN
G MSOE
MCU
D C
J6

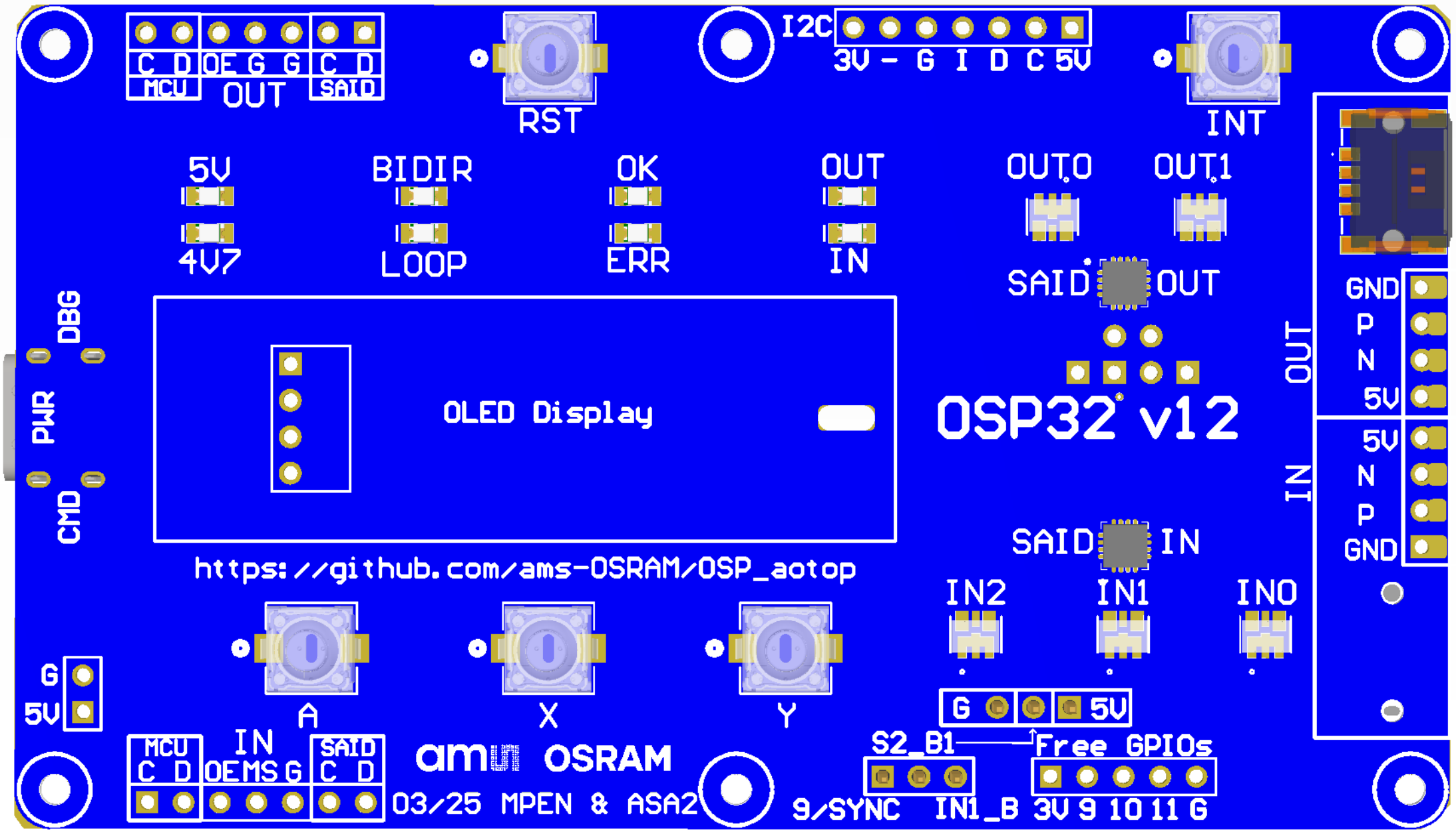
C D OE G G C D
MCU
OUT
SAID
RST
I2C
3V - G I D C 5V
INT
5V
BIDIR
OK
OUT
OUT.0
OUT.1
4V7
LOOP
ERR
IN
SAID
OUT
DBG
PWR
CMD
OLED Display
OSP32 v12
GND
P
N
5V
OUT
5V
N
P
GND
IN
SAID
IN
https://github.com/ams-OSRAM/OSP_aotop
IN2
IN1
IN0
G
5V
A
X
Y
G
5V
MCU
C D
IN
OE MS G
SAID
C D
ams OSRAM
03/25 MPEN & ASA2
S2_B1
Free GPIOs
9/SYNC IN1_B 3V 9 10 11 G

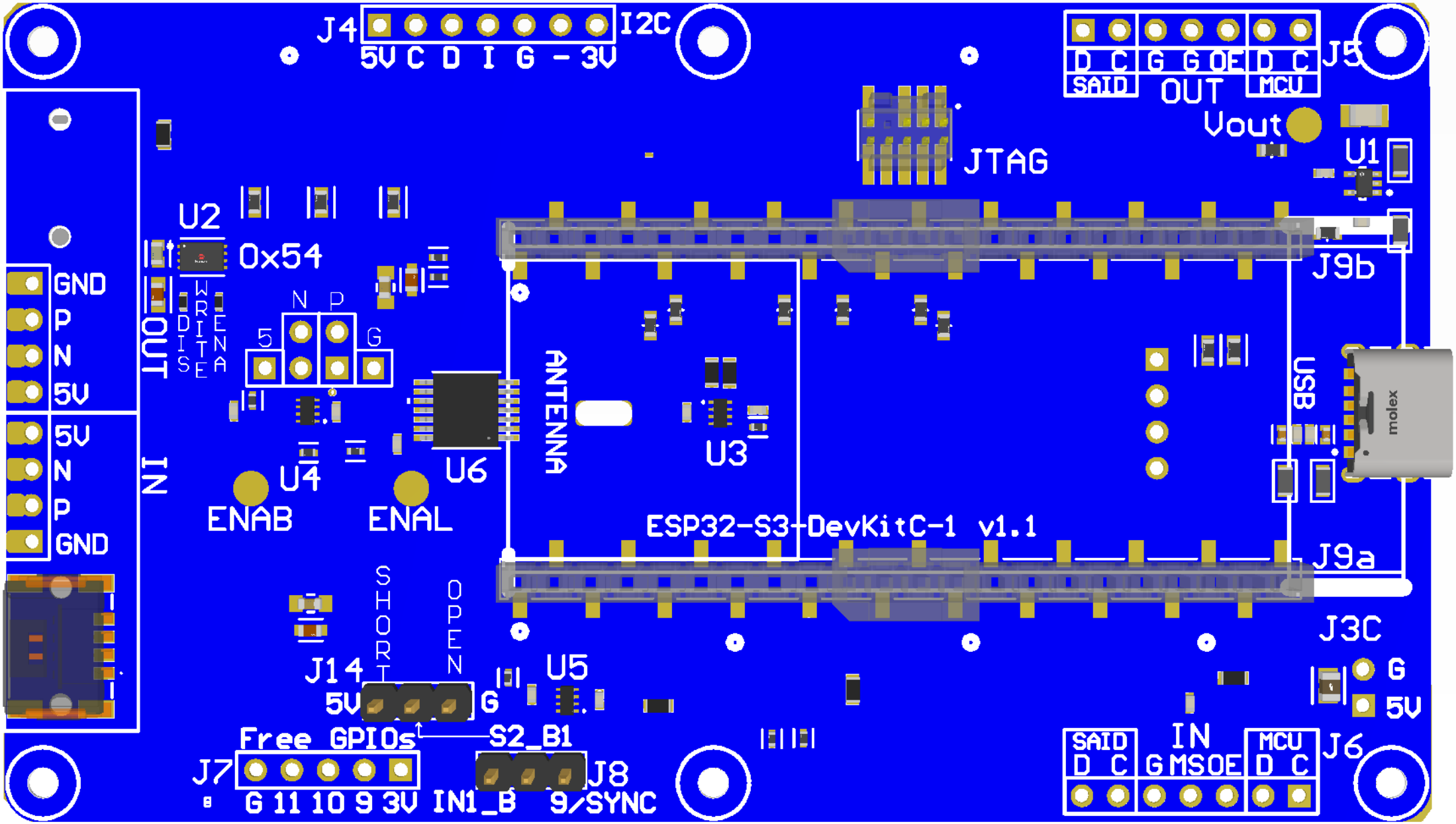
J4
I2C
5V C D I G - 3V
J5
D C G G OE D C
SAID
OUT
MCU
Vout
U1
JTAG
U2
0x54
J9b
GND
P
N
5V
OUT
WRITE DISE
WRITE ENA
N P
5 G
ANTENNA
U3
USB
molex
5V
N
P
GND
IN
U4
U6
ENAB
ENAL
ESP32-S3-DevKitC-1 v1.1
J9a
SHORT
OPEN
J14
5V G
U5
J3C
G
5V
Free GPIOs
S2_B1
J7
G 11 10 9 3V
IN1_B
J8
9/SYNC
SAID
D C
IN
G MSOE
MCU
D C
J6

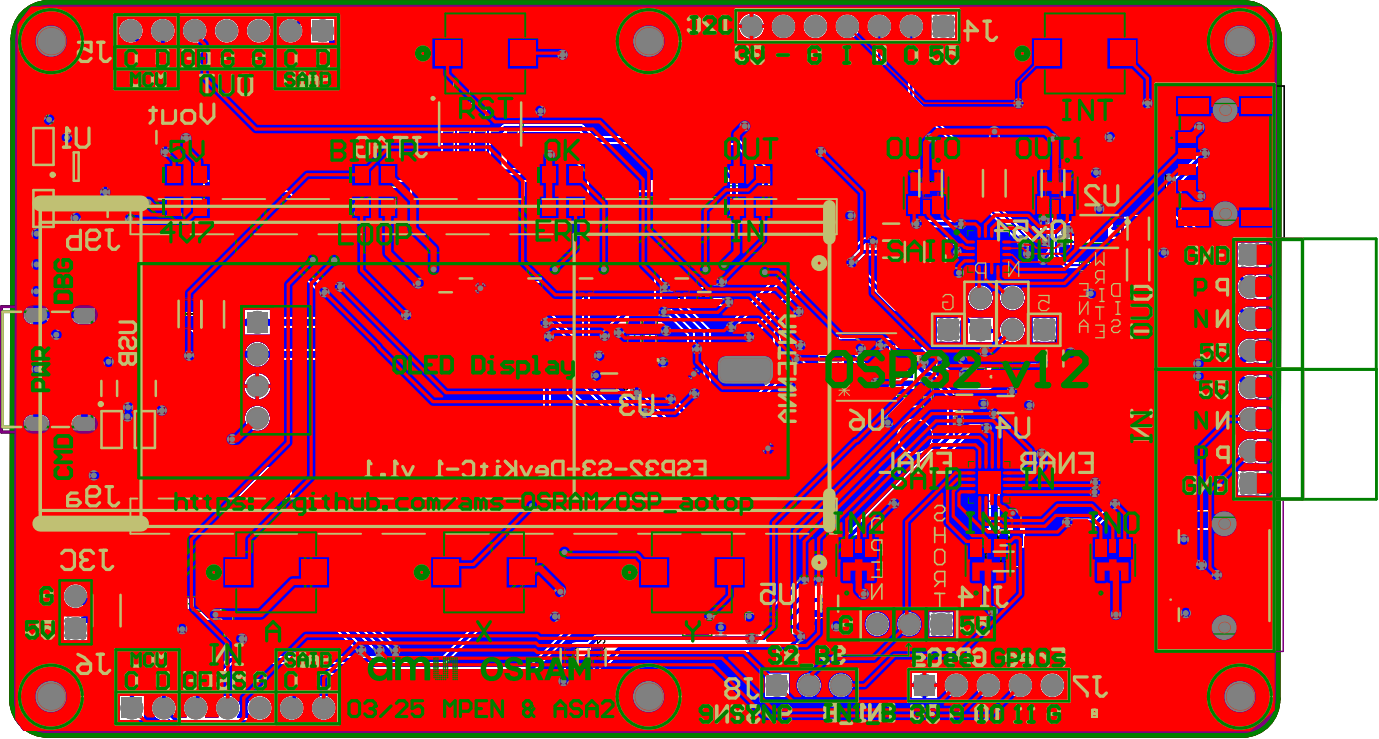
OSP32 v12
OLED Display
ESP32-S3+DevKitC-1 v1.1
https://github.com/ams-OSRAM/OSP_setup
ams OSRAM
03/25 MPEN & ASA2
BATTERY
LOOP
OK
ERR
OUT
IN
INT
GND
P
N
5V
Vout
USB
PWR
DBG
CHD
SAW1
SAW2
SAW3
SAW4
SAW5
SAW6
SAW7
SAW8
SAW9
SAW10
SAW11
SAW12
SAW13
SAW14
SAW15
SAW16
SAW17
SAW18
SAW19
SAW20
SAW21
SAW22
SAW23
SAW24
SAW25
SAW26
SAW27
SAW28
SAW29
SAW30
SAW31
SAW32
SAW33
SAW34
SAW35
SAW36
SAW37
SAW38
SAW39
SAW40
SAW41
SAW42
SAW43
SAW44
SAW45
SAW46
SAW47
SAW48
SAW49
SAW50
SAW51
SAW52
SAW53
SAW54
SAW55
SAW56
SAW57
SAW58
SAW59
SAW60
SAW61
SAW62
SAW63
SAW64
SAW65
SAW66
SAW67
SAW68
SAW69
SAW70
SAW71
SAW72
SAW73
SAW74
SAW75
SAW76
SAW77
SAW78
SAW79
SAW80
SAW81
SAW82
SAW83
SAW84
SAW85
SAW86
SAW87
SAW88
SAW89
SAW90
SAW91
SAW92
SAW93
SAW94
SAW95
SAW96
SAW97
SAW98
SAW99
SAW100
SAW101
SAW102
SAW103
SAW104
SAW105
SAW106
SAW107
SAW108
SAW109
SAW110
SAW111
SAW112
SAW113
SAW114
SAW115
SAW116
SAW117
SAW118
SAW119
SAW120
SAW121
SAW122
SAW123
SAW124
SAW125
SAW126
SAW127
SAW128
SAW129
SAW130
SAW131
SAW132
SAW133
SAW134
SAW135
SAW136
SAW137
SAW138
SAW139
SAW140
SAW141
SAW142
SAW143
SAW144
SAW145
SAW146
SAW147
SAW148
SAW149
SAW150
SAW151
SAW152
SAW153
SAW154
SAW155
SAW156
SAW157
SAW158
SAW159
SAW160
SAW161
SAW162
SAW163
SAW164
SAW165
SAW166
SAW167
SAW168
SAW169
SAW170
SAW171
SAW172
SAW173
SAW174
SAW175
SAW176
SAW177
SAW178
SAW179
SAW180
SAW181
SAW182
SAW183
SAW184
SAW185
SAW186
SAW187
SAW188
SAW189
SAW190
SAW191
SAW192
SAW193
SAW194
SAW195
SAW196
SAW197
SAW198
SAW199
SAW200
SAW201
SAW202
SAW203
SAW204
SAW205
SAW206
SAW207
SAW208
SAW209
SAW210
SAW211
SAW212
SAW213
SAW214
SAW215
SAW216
SAW217
SAW218
SAW219
SAW220
SAW221
SAW222
SAW223
SAW224
SAW225
SAW226
SAW227
SAW228
SAW229
SAW230
SAW231
SAW232
SAW233
SAW234
SAW235
SAW236
SAW237
SAW238
SAW239
SAW240
SAW241
SAW242
SAW243
SAW244
SAW245
SAW246
SAW247
SAW248
SAW249
SAW250
SAW251
SAW252
SAW253
SAW254
SAW255
SAW256
SAW257
SAW258
SAW259
SAW260
SAW261
SAW262
SAW263
SAW264
SAW265
SAW266
SAW267
SAW268
SAW269
SAW270
SAW271
SAW272
SAW273
SAW274
SAW275
SAW276
SAW277
SAW278
SAW279
SAW280
SAW281
SAW282
SAW283
SAW284
SAW285
SAW286
SAW287
SAW288
SAW289
SAW290
SAW291
SAW292
SAW293
SAW294
SAW295
SAW296
SAW297
SAW298
SAW299
SAW300
SAW301
SAW302
SAW303
SAW304
SAW305
SAW306
SAW307
SAW308
SAW309
SAW310
SAW311
SAW312
SAW313
SAW314
SAW315
SAW316
SAW317
SAW318
SAW319
SAW320
SAW321
SAW322
SAW323
SAW324
SAW325
SAW326
SAW327
SAW328
SAW329
SAW330
SAW331
SAW332
SAW333
SAW334
SAW335
SAW336
SAW337
SAW338
SAW339
SAW340
SAW341
SAW342
SAW343
SAW344
SAW345
SAW346
SAW347
SAW348
SAW349
SAW350
SAW351
SAW352
SAW353
SAW354
SAW355
SAW356
SAW357
SAW358
SAW359
SAW360
SAW361
SAW362
SAW363
SAW364
SAW365
SAW366
SAW367
SAW368
SAW369
SAW370
SAW371
SAW372
SAW373
SAW374
SAW375
SAW376
SAW377
SAW378
SAW379
SAW380
SAW381
SAW382
SAW383
SAW384
SAW385
SAW386
SAW387
SAW388
SAW389
SAW390
SAW391
SAW392
SAW393
SAW394
SAW395
SAW396
SAW397
SAW398
SAW399
SAW400
SAW401
SAW402
SAW403
SAW404
SAW405
SAW406
SAW407
SAW408
SAW409
SAW410
SAW411
SAW412
SAW413
SAW414
SAW415
SAW416
SAW417
SAW418
SAW419
SAW420
SAW421
SAW422
SAW423
SAW424
SAW425
SAW426
SAW427
SAW428
SAW429
SAW430
SAW431
SAW432
SAW433
SAW434
SAW435
SAW436
SAW437
SAW438
SAW439
SAW440
SAW441
SAW442
SAW443
SAW444
SAW445
SAW446
SAW447
SAW448
SAW449
SAW450
SAW451
SAW452
SAW453
SAW454
SAW455
SAW456
SAW457
SAW458
SAW459
SAW460
SAW461
SAW462
SAW463
SAW464
SAW465
SAW466
SAW467
SAW468
SAW469
SAW470
SAW471
SAW472
SAW473
SAW474
SAW475
SAW476
SAW477
SAW478
SAW479
SAW480
SAW481
SAW482
SAW483
SAW484
SAW485
SAW486
SAW487
SAW488
SAW489
SAW490
SAW491
SAW492
SAW493
SAW494
SAW495
SAW496
SAW497
SAW498
SAW499
SAW500
SAW501
SAW502
SAW503
SAW504
SAW505
SAW506
SAW507
SAW508
SAW509
SAW510
SAW511
SAW512
SAW513
SAW514
SAW515
SAW516
SAW517
SAW518
SAW519
SAW520
SAW521
SAW522
SAW523
SAW524
SAW525
SAW526
SAW527
SAW528
SAW529
SAW530
SAW531
SAW532
SAW533
SAW534
SAW535
SAW536
SAW537
SAW538
SAW539
SAW540
SAW541
SAW542
SAW543
SAW544
SAW545
SAW546
SAW547
SAW548
SAW549
SAW550
SAW551
SAW552
SAW553
SAW554
SAW555
SAW556
SAW557
SAW558
SAW559
SAW560
SAW561
SAW562
SAW563
SAW564
SAW565
SAW566
SAW567
SAW568
SAW569
SAW570
SAW571
SAW572
SAW573
SAW574
SAW575
SAW576
SAW577
SAW578
SAW579
SAW580
SAW581
SAW582
SAW583
SAW584
SAW585
SAW586
SAW587
SAW588
SAW589
SAW590
SAW591
SAW592
SAW593
SAW594
SAW595
SAW596
SAW597
SAW598
SAW599
SAW600
SAW601
SAW602
SAW603
SAW604
SAW605
SAW606
SAW607
SAW608
SAW609
SAW610
SAW611
SAW612
SAW613
SAW614
SAW615
SAW616
SAW617
SAW618
SAW619
SAW620
SAW621
SAW622
SAW623
SAW624
SAW625
SAW626
SAW627
SAW628
SAW629
SAW630
SAW631
SAW632
SAW633
SAW634
SAW635
SAW636
SAW637
SAW638
SAW639
SAW640
SAW641
SAW642
SAW643
SAW644
SAW645
SAW646
SAW647
SAW648
SAW649
SAW650
SAW651
SAW652
SAW653
SAW654
SAW655
SAW656
SAW657
SAW658
SAW659
SAW660
SAW661
SAW662
SAW663
SAW664
SAW665
SAW666
SAW667
SAW668
SAW669
SAW670
SAW671
SAW672
SAW673
SAW674
SAW675
SAW676
SAW677
SAW678
SAW679
SAW680
SAW681
SAW682
SAW683
SAW684
SAW685
SAW686
SAW687
SAW688
SAW689
SAW690
SAW691
SAW692
SAW693
SAW694
SAW695
SAW696
SAW697
SAW698
SAW699
SAW700
SAW701
SAW702
SAW703
SAW704
SAW705
SAW706
SAW707
SAW708
SAW709
SAW710
SAW711
SAW712
SAW713
SAW714
SAW715
SAW716
SAW717
SAW718
SAW719
SAW720
SAW721
SAW722
SAW723
SAW724
SAW725
SAW726
SAW727
SAW728
SAW729
SAW730
SAW731
SAW732
SAW733
SAW734
SAW735
SAW736
SAW737
SAW738
SAW739
SAW740
SAW741
SAW742
SAW743
SAW744
SAW745
SAW746
SAW747
SAW748
SAW749
SAW750
SAW751
SAW752
SAW753
SAW754
SAW755
SAW756
SAW757
SAW758
SAW759
SAW760
SAW761
SAW762
SAW763
SAW764
SAW765
SAW766
SAW767
SAW768
SAW769
SAW770
SAW771
SAW772
SAW773
SAW774
SAW775
SAW776
SAW777
SAW778
SAW779
SAW780
SAW781
SAW782
SAW783
SAW784
SAW785
SAW786
SAW787
SAW788
SAW789
SAW790
SAW791
SAW792
SAW793
SAW794
SAW795
SAW796
SAW797
SAW798
SAW799
SAW800
SAW801
SAW802
SAW803
SAW804
SAW805
SAW806
SAW807
SAW808
SAW809
SAW810
SAW811
SAW812
SAW813
SAW814
SAW815
SAW816
SAW817
SAW818
SAW819
SAW820
SAW821
SAW822
SAW823
SAW824
SAW825
SAW826
SAW827
SAW828
SAW829
SAW830
SAW831
SAW832
SAW833
SAW834
SAW835
SAW836
SAW837
SAW838
SAW839
SAW840
SAW841
SAW842
SAW843
SAW844
SAW845
SAW846
SAW847
SAW848
SAW849
SAW850
SAW851
SAW852
SAW853
SAW854
SAW855
SAW856
SAW857
SAW858
SAW859
SAW860
SAW861
SAW862
SAW863
SAW864
SAW865
SAW866
SAW867
SAW868
SAW869
SAW870
SAW871
SAW872
SAW873
SAW874
SAW875
SAW876
SAW877
SAW878
SAW879
SAW880
SAW881
SAW882
SAW883
SAW884
SAW885
SAW886
SAW887
SAW888
SAW889
SAW890
SAW891
SAW892
SAW893
SAW894
SAW895
SAW896
SAW897
SAW898
SAW899
SAW900
SAW901
SAW902
SAW903
SAW904
SAW905
SAW906
SAW907
SAW908
SAW909
SAW910
SAW911
SAW912
SAW913
SAW914
SAW915
SAW916
SAW917
SAW918
SAW919
SAW920
SAW921
SAW922
SAW923
SAW924
SAW925
SAW926
SAW927
SAW928
SAW929
SAW930
SAW931
SAW932
SAW933
SAW934
SAW935
SAW936
SAW937
SAW938
SAW939
SAW940
SAW941
SAW942
SAW943
SAW944
SAW945
SAW946
SAW947
SAW948
SAW949
SAW950
SAW951
SAW952
SAW953
SAW954
SAW955
SAW956
SAW957
SAW958
SAW959
SAW960
SAW961
SAW962
SAW963
SAW964
SAW965
SAW966
SAW967
SAW968
SAW969
SAW970
SAW971
SAW972
SAW973
SAW974
SAW975
SAW976
SAW977
SAW978
SAW979
SAW980
SAW981
SAW982
SAW983
SAW984
SAW985
SAW986
SAW987
SAW988
SAW989
SAW990
SAW991
SAW992
SAW993
SAW994
SAW995
SAW996
SAW997
SAW998
SAW999
SAW1000

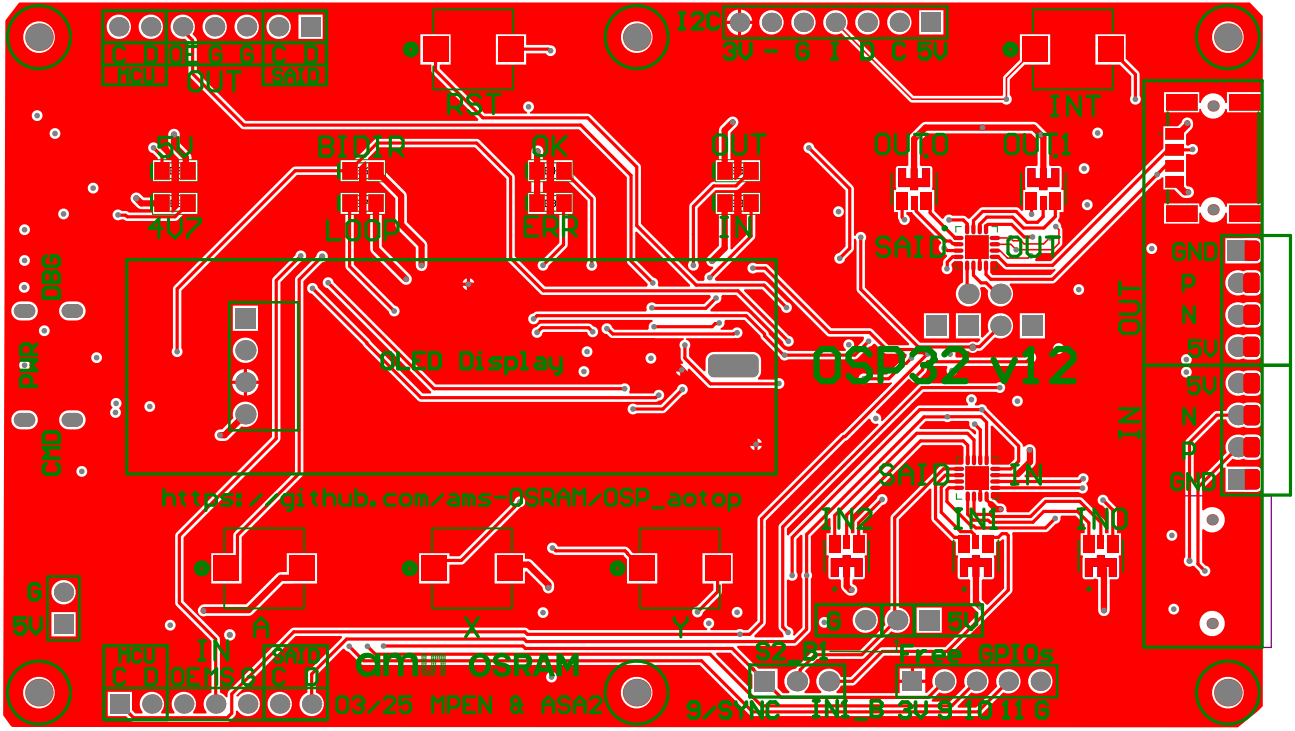
MCU
OUT
SAID
RST
I2C
3V - G I D C 5V
INT
5V
4V7
BIDIR
LOOP
OK
ERR
OUT
IN
OUT0
OUT1
SAID
OUT
GND
P
N
5V
5V
N
P
GND
OUT
IN
PWR
DBG
CMD
OLED Display
OSP32 v12
https://github.com/ams-OSRAM/OSP_aotop
SAID
IN
IN2
IN1
IN0
G
5V
A
X
Y
IN
MCU
SAID
OE MS G
03/25 MPEN & ASA2
SZ_B1
Free GPIOs
9/SYNC INT B 3V 8 10 11 G

J5
D C G G DEN C
MCU
SATO
OUT
VBUS
J7AG
J9B
USB
J9A
J3C
G
5V
J6
IN
MCU
SATO
D C G MSDE D C
J2C
J4
5V C D I G - 3V
J7
G 11 10 5 3V INI_B 5/SYNC
J8
S2_BI
Free GPIOs
J1
5V
G
J4
ENDB
ENDAL
J6
J5
J3
J2
J1
GND
N
5V
5V
N
p
GND
IN
OUT
ESP82-S8-DevKit0-1 v1.1