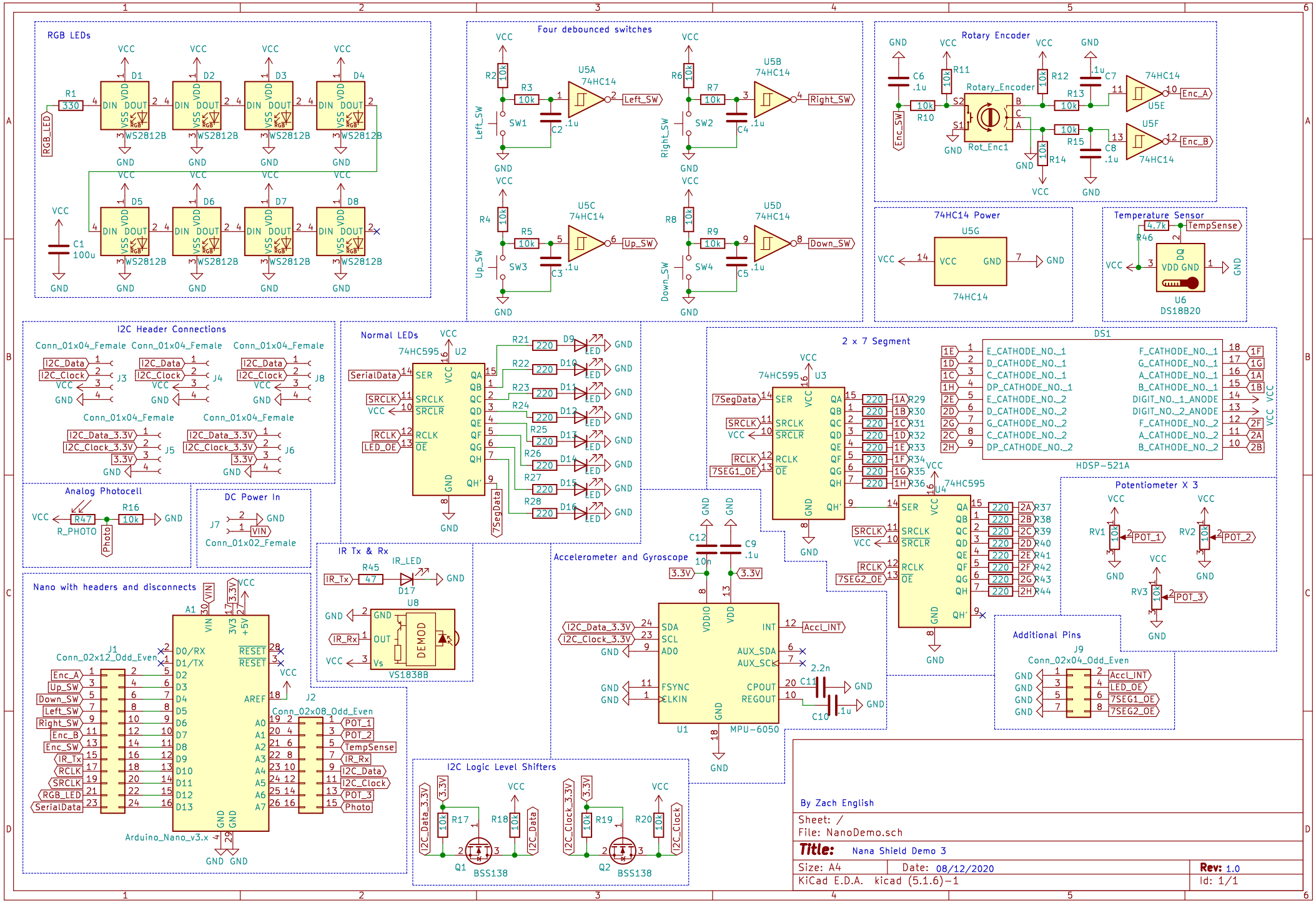
RGB LEDs
Four debounced switches
Rotary Encoder
74HC14 Power
Temperature Sensor
I2C Header Connections
Normal LEDs
2 x 7 Segment
Analog Photocell
DC Power In
IR Tx & Rx
Accelerometer and Gyroscope
Potentiometer X 3
Nano with headers and disconnects
Additional Pins
I2C Logic Level Shifters
By Zach English
Sheet: /
File: NanoDemo.sch
Title: Nana Shield Demo 3
Size: A4
Date: 08/12/2020
Rev: 1.0
KiCad E.D.A. kicad (5.1.6)-1
Id: 1/1