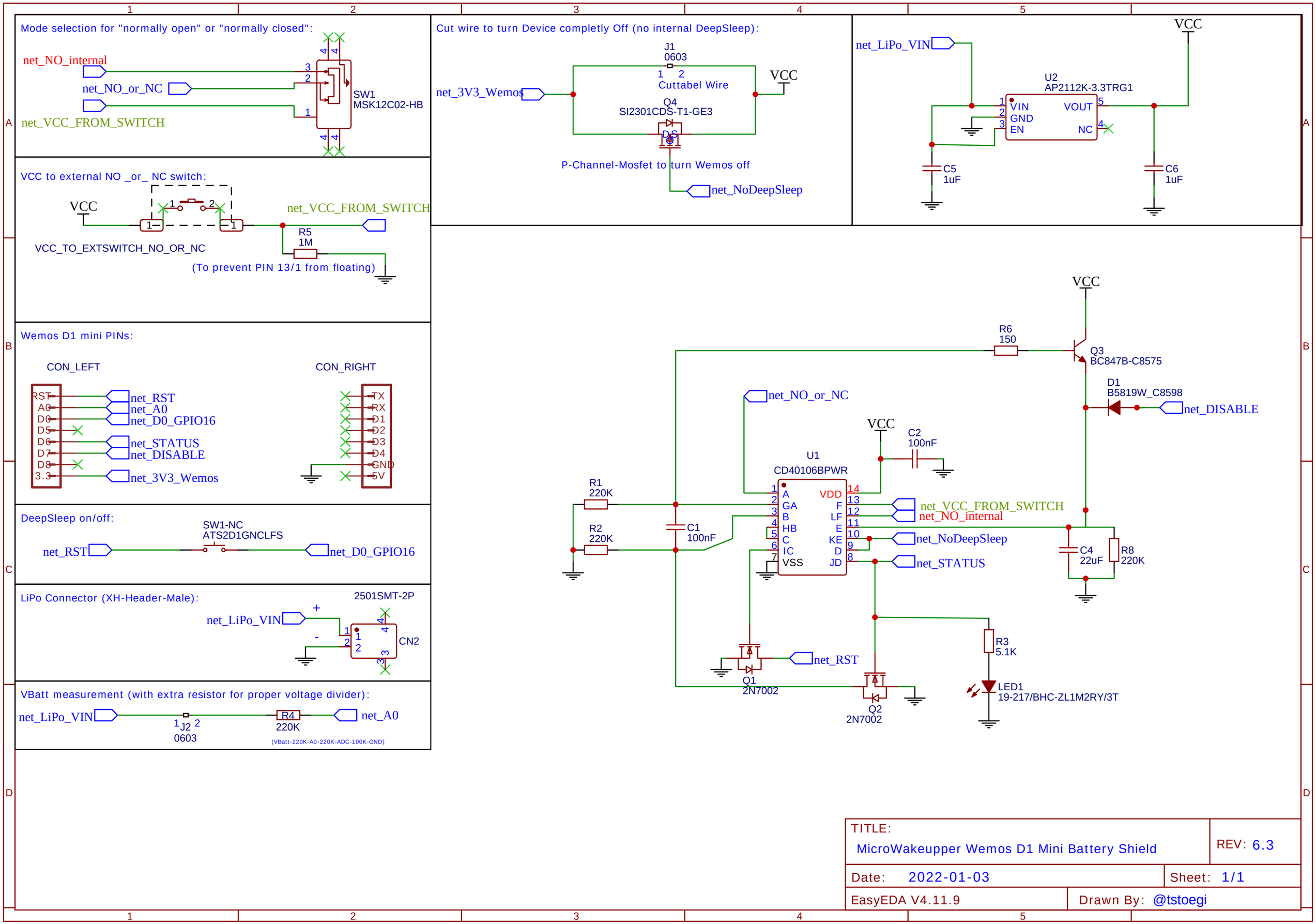

TITLE: MicroWakeupper Wemos D1 Mini Battery Shield	REV: 6.3
Date: 2022-01-03	Sheet: 1/1
EasyEDA V4.11.9	Drawn By: @tstoegi