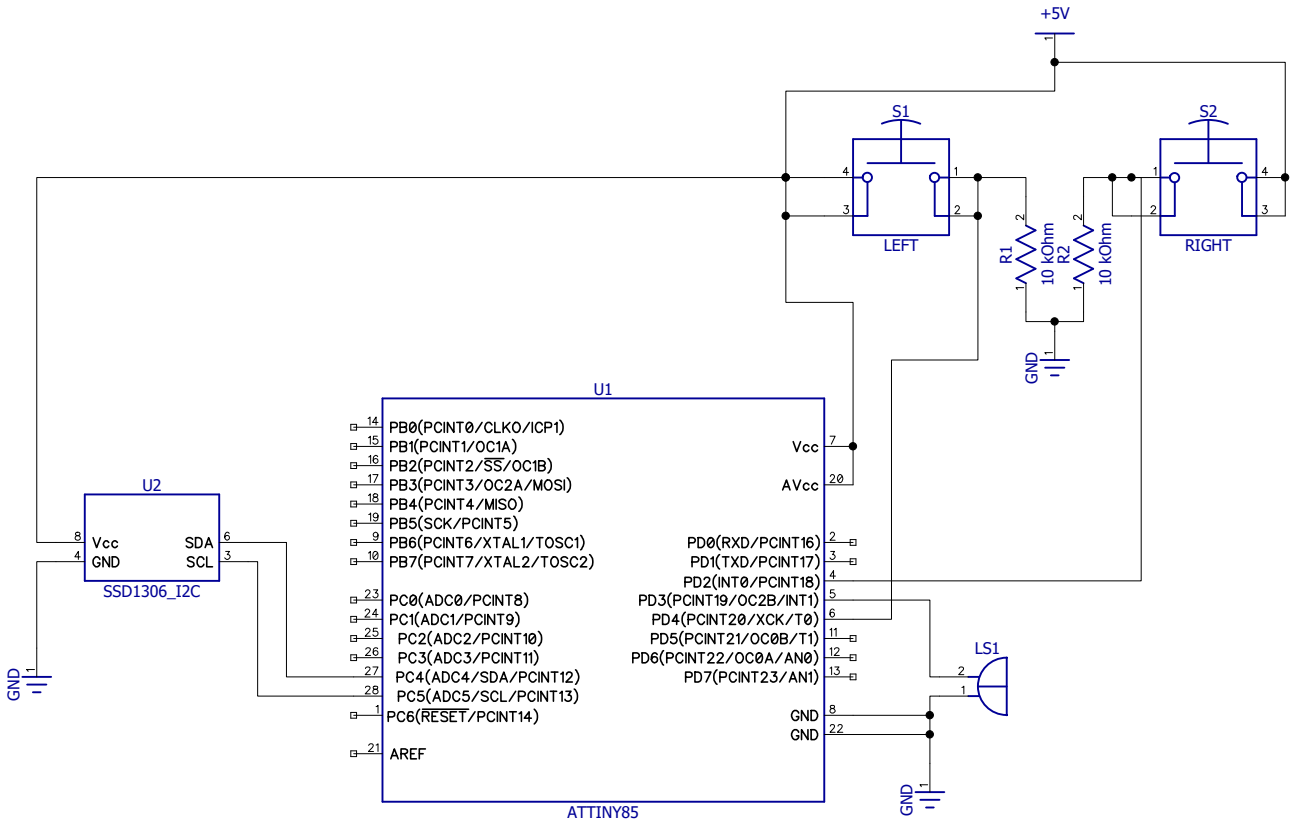
+5V
S1
LEFT
S2
RIGHT
R1
10 kOhm
R2
10 kOhm
GND
U1
PB0(PCINT0/CLKO/ICP1)
PB1(PCINT1/OC1A)
PB2(PCINT2/SS/OC1B)
PB3(PCINT3/OC2A/MOSI)
PB4(PCINT4/MISO)
PB5(SCK/PCINT5)
PB6(PCINT6/XTAL1/TOSC1)
PB7(PCINT7/XTAL2/TOSC2)
PC0(ADC0/PCINT8)
PC1(ADC1/PCINT9)
PC2(ADC2/PCINT10)
PC3(ADC3/PCINT11)
PC4(ADC4/SDA/PCINT12)
PC5(ADC5/SCL/PCINT13)
PC6(RESET/PCINT14)
AREF
Vcc
AVcc
PD0(RXD/PCINT16)
PD1(TXD/PCINT17)
PD2(INT0/PCINT18)
PD3(PCINT19/OC2B/INT1)
PD4(PCINT20/XCK/T0)
PD5(PCINT21/OC0B/T1)
PD6(PCINT22/OC0A/AN0)
PD7(PCINT23/AN1)
GND
GND
ATTINY85
U2
Vcc
GND
SDA
SCL
SSD1306_I2C
LS1
GND
GND